PLASTITALIA™ S.p.A.
high performance fittings

TECHNICAL DATASHEET

Accesorios electrosoldables

Codo 11,25° electrosoldable

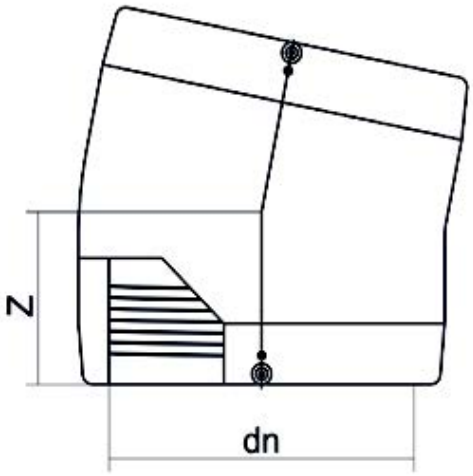

PRODUCT DETAILS	
ITEM CODE	GE1125P250C
d_n	250
SDR DESIGN	11

GEOMETRIC CHARACTERISTICS	
d_n	250
Z [mm]	160
Mass [kg]	5.09

*The pictures are for illustrative purposes only. the product may differ in color and / or some of its parts.

PLASTITALIA SPA reserves the right to revise this specification, while maintaining compliance with the requirements of the product without prior notice. Tolerance on diameters and thickness according to the standards unless otherwise specified. Tolerance: ± 5%

Via Ferrara - 98061 - Brolo (ME) - Italy tel. +39 0941 536311 fax +39 0941 561476 info@plastitaliaspa.com
www.plastitaliaspa.com